Paint Creek Shoreline Restoration
for
Oakland Township Parks & Recreation Commission

General Notes

1. CONTRACTOR shall furnish all labor, materials, equipment, transportation, services and necessary incidental work required to complete work as shown on the Drawings and/or as specified herein.
2. All work shall comply with all applicable permits.
3. In general the work includes: Site construction, clearing and grubbing, erosion control, earthwork, upland seeding, and supply and installation of seed mixes and live dormant stakes.
4. Conduct site clearing operations to insure minimum interference with roads, streets, walks and other adjacent occupied or used facilities. Do not close or obstruct streets, walks, and other adjacent occupied or used facilities without permission from authorities having jurisdiction.
5. Limits of work are established on the Drawing and shall be verified with the Wetland Consultant or Site Manager prior to any construction activities. No vehicle activity shall occur outside the limit of construction area.
6. Contractor is responsible for procuring and complying with any additional permits that may be required by any governing agency for the completion of this project, including, but not limited to, soil erosion control permits and county drain permits.
7. Excess excavated soil material shall be placed at an upland location on-site determined by the Site Manager. Stockpiled excess material shall be graded and stabilized with seed to prevent erosion into existing wetland or watercourse. Contractor shall not remove and/or fill excess soil material without prior approval of Wetland Consultant or Site Manager and Contractor shall submit cost to transport excess soil materials to OWNER prior to removal.

Utilities

1. Locations of existing underground utilities are shown using the best information available, but with no guarantee that indicated locations are accurate or that utility lines other than those shown may or may not be present.
2. Contractor and those subcontractors affected by site conditions shall be fully responsible for any deductions or conclusions made on the basis of this information and that of any additional site inspections, if made.
3. "MISS DIG" shall be contacted by Contractor for location of underground utilities prior to start of work. It should be understood that MISS DIG will not locate private lines, only utility company lines and the Contractor will be responsible for verifying all locations.
4. Conflicts between utilities and proposed work shall be reported to Wetland Consultant or Site Manager prior to construction.

Layout

1. Contractor shall establish and maintain grades, benchmarks, and all other significant reference line of points. Layout of elevations and alignments shall be performed by a Licensed Surveyor. Wetland Consultant shall review the layout of all grades/contours prior to construction and after the establishment of sub-grades.
2. The Contractor shall designate a full-time Project Supervisor, who is authorized to act as his/her agent and to be responsible for all subcontractors. The Project Supervisor shall be designated by name prior to commencement of the work and shall be available for proper supervision of the project for the duration of the MDEQ permit and/or contract.

Sequence of Construction

1. Hold a pre-construction meeting with all parties involved. Examine the site to ascertain the state and conditions under which the work is to be done and review conditions of all applicable permits.
2. Install erosion control measures and tree protection to the limits shown on the drawings.
3. Stream flow should be diverted around the work area according to a plan approved by the MDEQ and/or local authorities. Construction within the stream channel is limited to a maximum of 5 feet from the edge of water and should particularly minimize impacts to areas with gravel or cobble substrates.
4. Clear and grub woody vegetation within the limits of the streambank stabilization project areas as needed.
5. Survey and stake proposed layout for site construction. Wetland Consultant to review contour staking for excavations and fill areas.
6. Remove existing logs stockpiled against and under the undercut bank and strip and stockpile topsoil from proposed streambank stabilization project area.
7. Excavate and fill within limits of work to the required sub-grade elevations.
8. Survey and stake site for sub-grade elevations/contours. Wetland Consultant to review and approve the sub-grade elevations/contours prior to the placement of topsoil. Any adjustments to the project limits shall be decided at this time.
9. Place and spread stockpiled topsoil. Finished grades in streambank stabilization areas are subject to written approval from the Wetland Consultant.
10. Immediately following fine grading, the Wetland Consultant and Contractor shall meet on-site to jointly examine current site conditions under which the work is to be completed.
11. Stake limits of seeding and provide submittals to Wetland Consultant prior to seed placement. Wetland Consultant to approve seed mix and limits of seeding.
12. Immediately following seed staking, install trees, shrubs, and plugs, if any, according to specifications and plan details. Wetland Consultant may stake the location of all or some of the plant material.
13. Upon completion of tree, shrub, and plug planting, restore to finish grades any areas disturbed during the planting activities.
14. Immediately following planting, seed the streambank stabilization areas and any disturbed upland areas.
15. Provide straw mulch over seeded areas and apply erosion control blanket on slopes adjacent to existing Paint Creek and natural feature buffers. Crimp straw mulch into ground or apply tackifier to hold straw in place. Stake erosion control blankets into place.
16. If required by Owner or MDEQ, Contractor to provide as-built drawings to the Wetland Consultant and/or Owner.
17. Meet with Wetland Consultant to review the finished streambamk stabilization, and obtain a copy of the as-built drawings.
18. Remove tree protection and soil erosion control measures if approved by Wetland Consultant and provide site clean-up.

Live Cribwall

1. Excavate loose material at the toe of the embankment to a depth of 2 feet below the existing stream channel to establish a stable foundation. Incline the crib foundation and structure into the slope at a minimum angle (measured from the horizontal) ranging from 10H:1V to 6H:1V.

List of Drawings

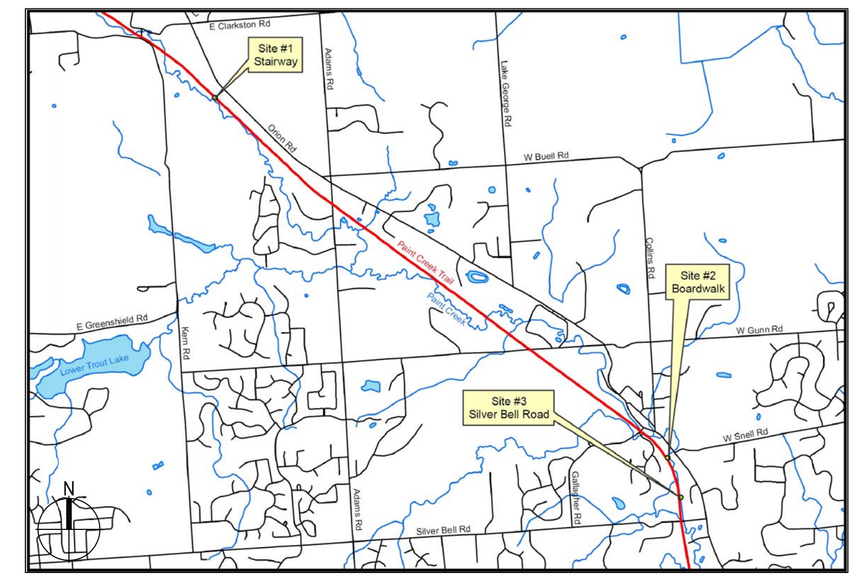

LOCATION MAP

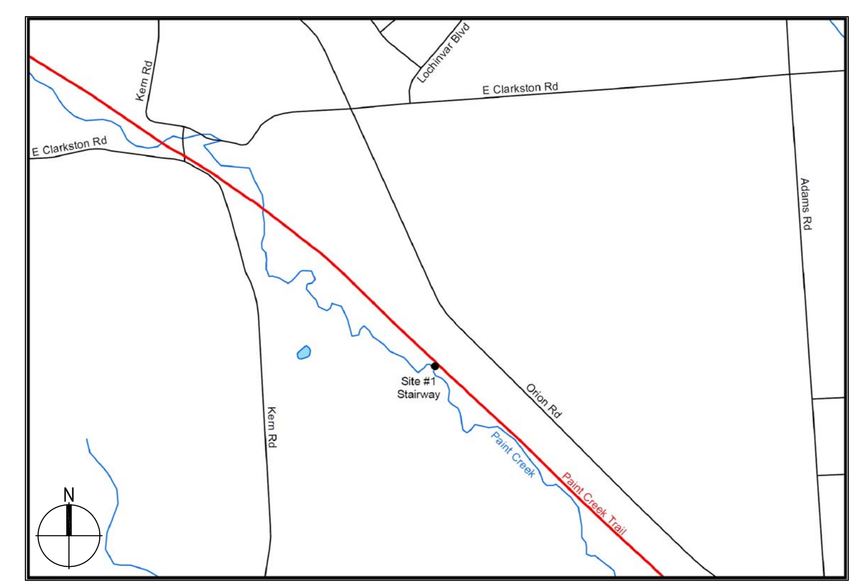

LOCATION MAP

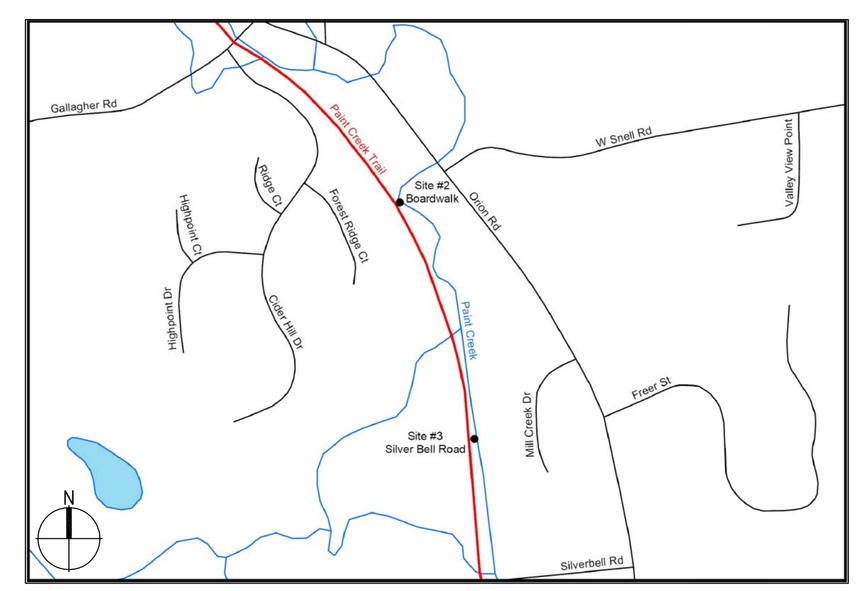

LOCATION MAP

ASTI Environmental

Charter Township of Oakland
Oakland County, MI

Paint Creek Shoreline Restoration
Title Sheet

1

DATE:	12/2/14
SHEET:	1 of 4
GIS/CADD:	JMD
CLIENT:	Oakland Township Parks & Recreation
DM:	PR
CHECKED:	PR
PROJECT:	8916

ASTI File 8916

Revisions:

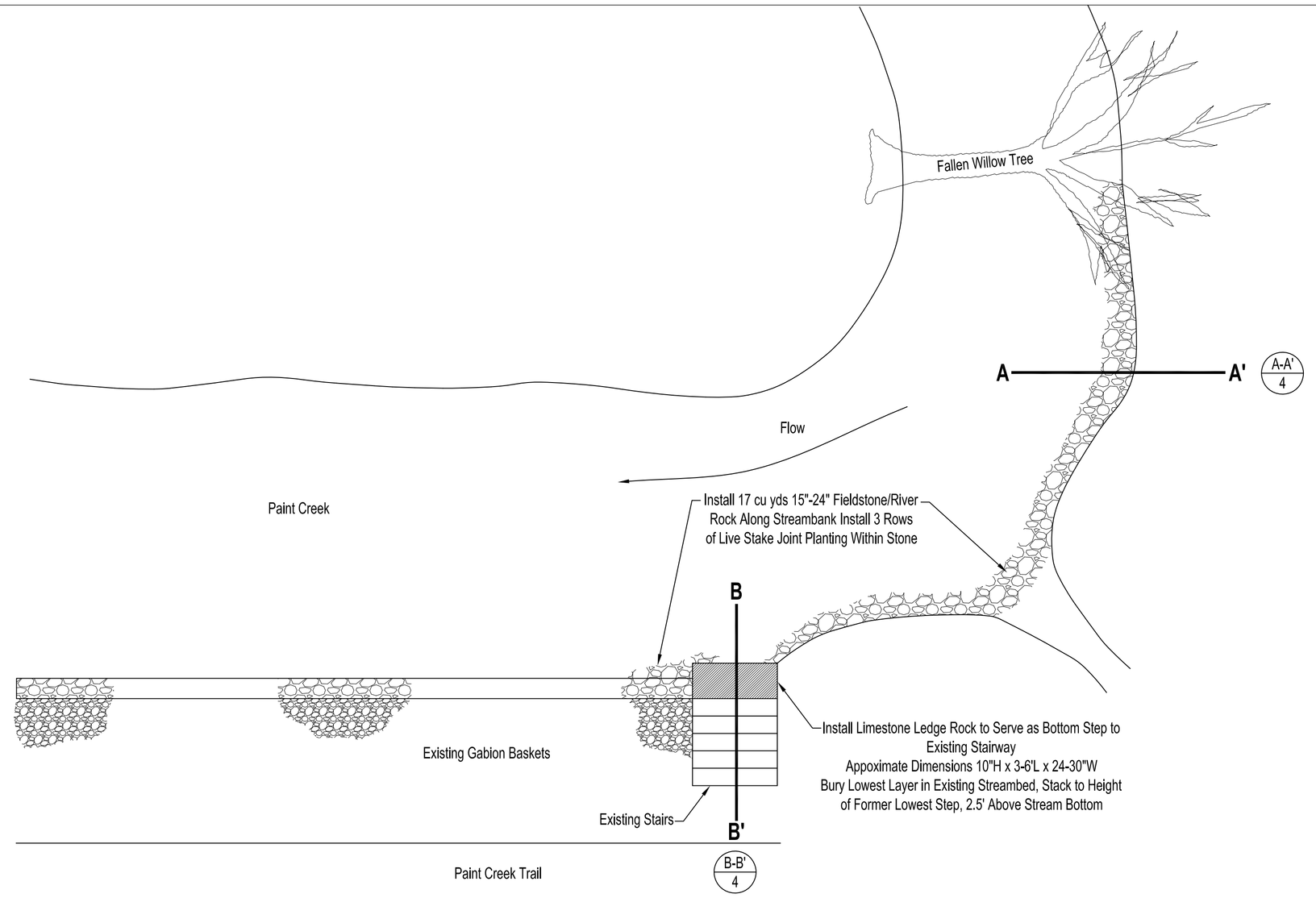

Site 1
Not to Scale

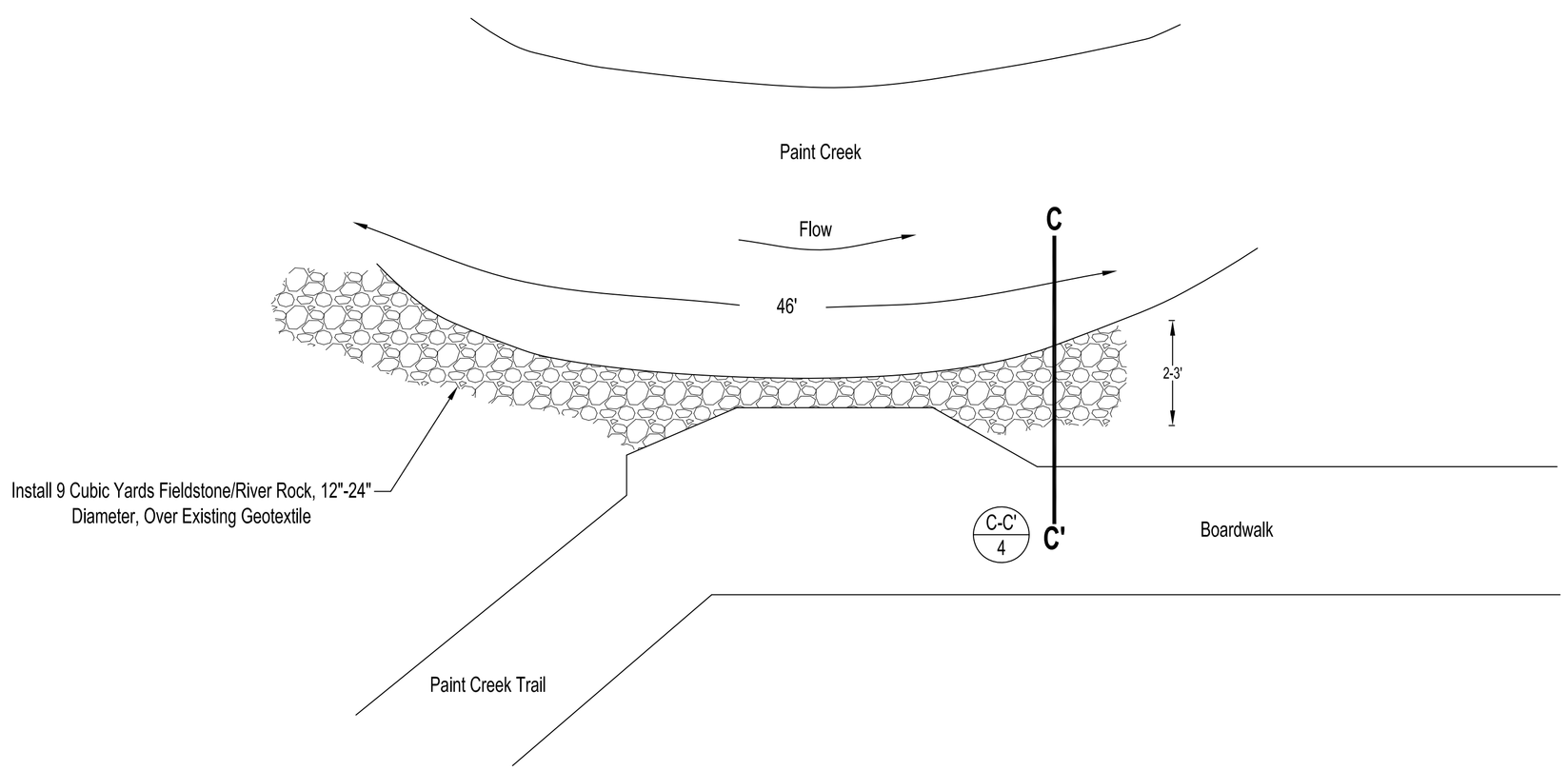

Site 2
Not to Scale

Sequence of Construction (continued from Sheet 1)

2. Portions of the crib framework placed below the Ordinary High Water Mark (OHWM) shall be constructed from untreated, unmilled cedar, Douglas fir, or tamarack (larch) logs 10 to 15 inches in diameter. Portions of the crib framework placed above the OHWM shall be constructed of logs previously cut and stockpiled at the project site, as possible.

3. Position the first course of logs or timbers at the front and back of the excavated foundation approximately 3 to 6 feet apart and parallel to the slope contour. Situate successive courses of logs or timbers at right angles on top of the previous course, in the manner of a log cabin, so that they overhang the front and back of the previous course by 3 to 6 inches.

4. Live crib walls can also be constructed in a stair-step fashion with each successive course of timbers set back 6 to 9 inches from the previously installed course.

5. Each course shall be secured to the preceding course with spikes or rebar.

6. Backfill in and around timber crib with stone from bottom of excavation to an elevation equal to or greater than the OHWM. Course above the OHWM, to an elevation of 818.46 (datum), shall be filled with compacted fill soil.

7. Each transverse log course contains live cuttings followed by a layer of tamped backfill.

8. Live branch cuttings should be placed on top of each face course having (stretcher) logs or timbers running parallel to the contour and above the OHWM.

9. The growing tips of the branches should be oriented toward the front face such that a maximum of 20 percent of their lengths project from the framework.

10. Each layer of branches should be followed with a layer of compacted soil to ensure an adequate soil-branch interface to stimulate growth.

11. Each face course (front and rear) and the area behind the structure shall be backfilled and hand tamped.

Bio-D Block Encapsulated Soil Lifts

1. Coir blocks and erosion control blankets (including netting) shall be 100% biodegradable coconut fiber. Coir blocks for the construction of soil lifts shall be 16 inches in height and 9 inches in thickness with attached coir erosion control blanket (BioD-Block™ 16-400 or equivalent).

2. Before installing BioD-Block coir block system, place at least 2 inches of soil on the top course of the cribwall and level the surface well.

3. Place a BioD-Block unit on level surface, keeping the female ends pointing downstream, and spread the bottom fabric. Anchor the bottom fabric to the ground well with suitable length metal staples or wooden pegs. Fill soil up to the height of the coir block and compact the filled soil well. Cover the compacted filled material with top fabric and anchor it well.

4. Drive hardwood stakes, 2-3 feet apart, into the substrate along the front face of the Bio-D Blocks until the top of the stakes are approximately level with the top of the log. Stakes should be 3 to 4 feet in length, a minimum of 2 inches thick.

5. Repeat the coir block installation procedure described above to make soil lift layers as needed. Shape slope above the top layer at a 3H:1V slope and plant and/or seed as specified.

6. Join BioD-Block units by inserting male end of second BioD-Block to female end of first BioD-Block and drive stakes through overlapping fabrics of two BioD-Block units at their connection. Once again do not drive stakes all the way. Add BioD-Block units until desired length is achieved.

7. Use minimum 1" x 1.5" x 15" pine wedges every 3 ft to anchor the bottom fabric to the ground before filling with soil and 2" x 2" x 24" pine wedges on the top fabric after filling with soil. Pine wedges may be substituted with 12" or longer metal staples if necessary. Anchor top course as shown on the drawings.

LEGEND
Existing Contours
Proposed Contours

N
0 6 12 18
Approximate Scale in Feet

ASTI Environmental

Charter Township of Oakland
Oakland County, MI

Paint Creek Shoreline Restoration
Grading Plan - Sites 1 & 2

2

ASTI File 8916

Revisions:

DATE: 11/24/14
SHEET: 2 of 5
GIS/CADD: JMD
CLIENT: Oakland Township Parks & Recreation
PM: PR
CHECKED: PR
PROJECT: 8916

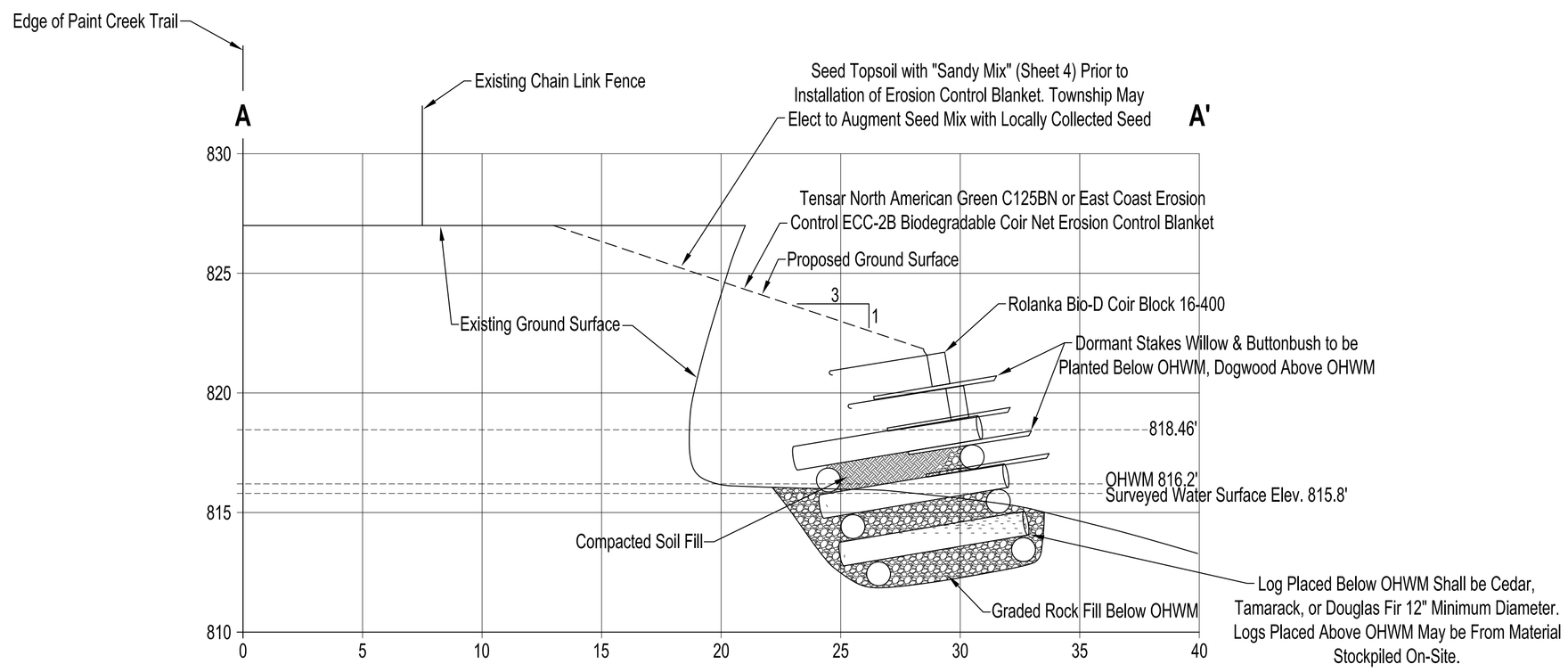

Cross Section D-D'

1" = 5'

0 5 10 15

Approximate Scale in Feet

Timber Cribwall to be Constructed with Cedar, Tamarack or Douglas Fir Below OHWM, Locally Stockpiled Wood Above OHWM

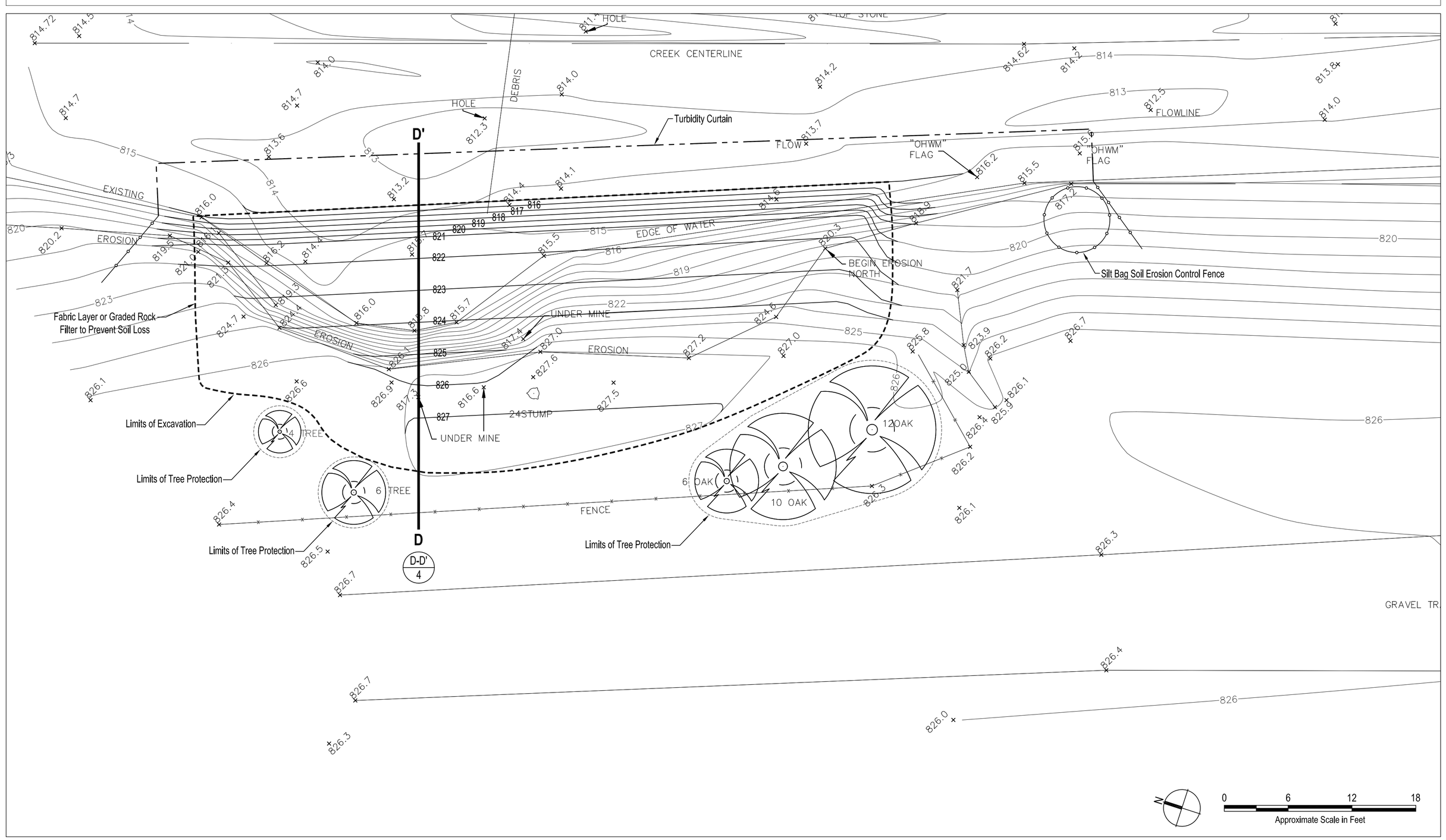

LEGEND

- Existing Contours
- Proposed Contours
- Silt Fence
- Turbidity Curtain

Grading Specifications

General Notes

1. Upon issuance, all work shall comply with MDEQ permit and other issued permits.
2. The contractor is responsible for supplying all materials, labor, equipment, transportation, all services incidental to clearing, grading, seeding, soil stabilization, and clean up of the mitigation areas.
3. Erosion controls are to be installed to the limits indicated on the plan and to the detail provided. Any damage to the existing natural features or the Paint Creek Trail not indicated on the plans shall be repaired immediately, with these areas being restored to their original character at the Contractor's own expense. All pre-erosion control measures shall be removed after final acceptance of work, unless suggested by the Wetland Consultant to remain in place. Care shall be taken during removal to minimize the loss of the accumulated sediment. If necessary, all silt and sedimentation is to be immediately removed from adjacent wetland or water courses.
4. All trash and debris shall be removed from the site and legally disposed of upon completion of grading activities. Repair to original character any areas outside the official work limits accidentally damaged by earthwork activities. Repair shall include finish grading and seeding as required to match existing grade and conditions, and maintenance of repaired areas.

Earthwork

1. Sub-grades shall be six inches lower than proposed finished grade contours and spot elevations to allow for the placement of topsoil. Six inches of topsoil shall be provided and installed.
2. Unless indicated otherwise, grade evenly between points and contours or between such points or contours and existing grades, refer to grading detail. Acceptable grade tolerance shall not exceed three inches (0.25 feet) from proposed grades specified on the plans to accommodate minor ruts, dirt clumps, organic matter and the like. Wetland Consultant may adjust in-field based on site conditions to accommodate the intent of the stream bank restoration. Care shall be taken to not excavate below the depths indicated. Contractor shall be responsible for any unauthorized excavation and/or fill operations. Notify Wetland Consultant a minimum of three business days in advance for sub-grade verification.
3. Wetland Consultant may determine during sub-grade verification that existing sub-soils are too water permeable to accommodate the intent of the streambank stabilization. If this is determined, Contractor shall either compact native sub-soils to a degree sufficient to inhibit water percolation or excavate an additional six inches of sub-soils and back fill with clean compacted clay soils, as directed by Wetland Consultant.
4. Remove water accumulation in excavation area (if required) to prevent soil changes detrimental to the stability of the sub-grade. Provide and maintain erosion control measures and sufficient dewatering devices such as pumps, hoses, strainers and other appurtenance required to convey the water from excavations. Water shall be discharged at an upland location a sufficient distance from the excavations to prevent backflow. Care shall be taken to prevent water borne silt from dewatering operations from entering existing wetlands and watercourses.
5. Surplus excavated material or material unsuitable for landfill cover or for filling or grading operations shall be disposed of in an upland location on the Owner's property as designated by the Site Manager. Stockpiled excess material shall be graded and stabilized to prevent erosion into existing wetland or watercourse.
6. Place and spread the approved topsoil at a minimum depth of six inches over the entire streambank stabilization area, see grading detail. Topsoil shall be spread roughly such that minor ruts, dirt clumps and organic matter are acceptable. Topsoil compaction during spreading operations shall occur only to the degree that shall prevent settlement beyond specified grade tolerance. Avoid over compacting beyond that provided by the spreading equipment. Over compacted topsoil shall be thoroughly loosened by scarifying or plowing to a depth of six inches. Notify Wetland Consultant a minimum three business days in advance for final acceptance of the finished grades.

ASTI Environmental

Charter Township of Oakland
Oakland County, MI

Paint Creek Shoreline Restoration
Grading Plan - Site 3

3

ASTI File 8916

Revisions:

DATE:	11/24/14
SHEET:	3 of 5
GIS/CADD:	JMD
CLIENT:	Oakland Township Parks & Recreation
PM:	PR
CHECKED:	PR
PROJECT:	8916

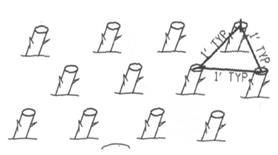

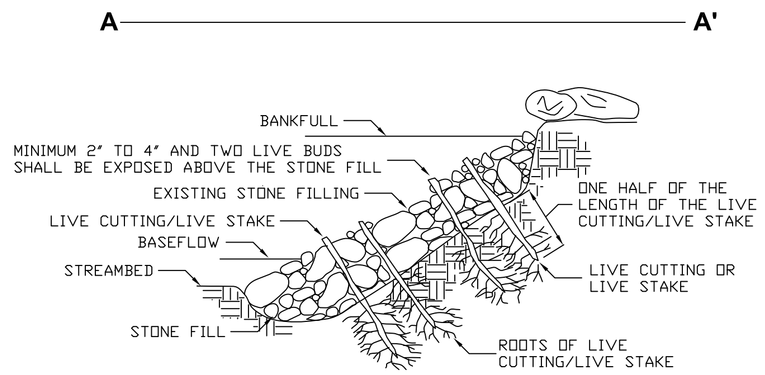

LIVE CUTTING/LIVE STAKE JOINT PLANTING CROSS SECTION

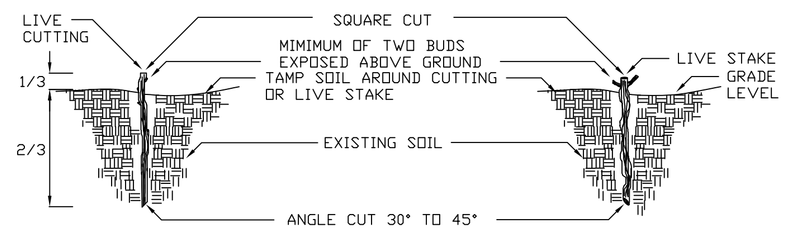

LIVE CUTTING CROSS SECTION
NOT TO SCALE

LIVE STAKE CROSS SECTION
NOT TO SCALE

Stairway Site Planting Detail A-A'

Not to Scale

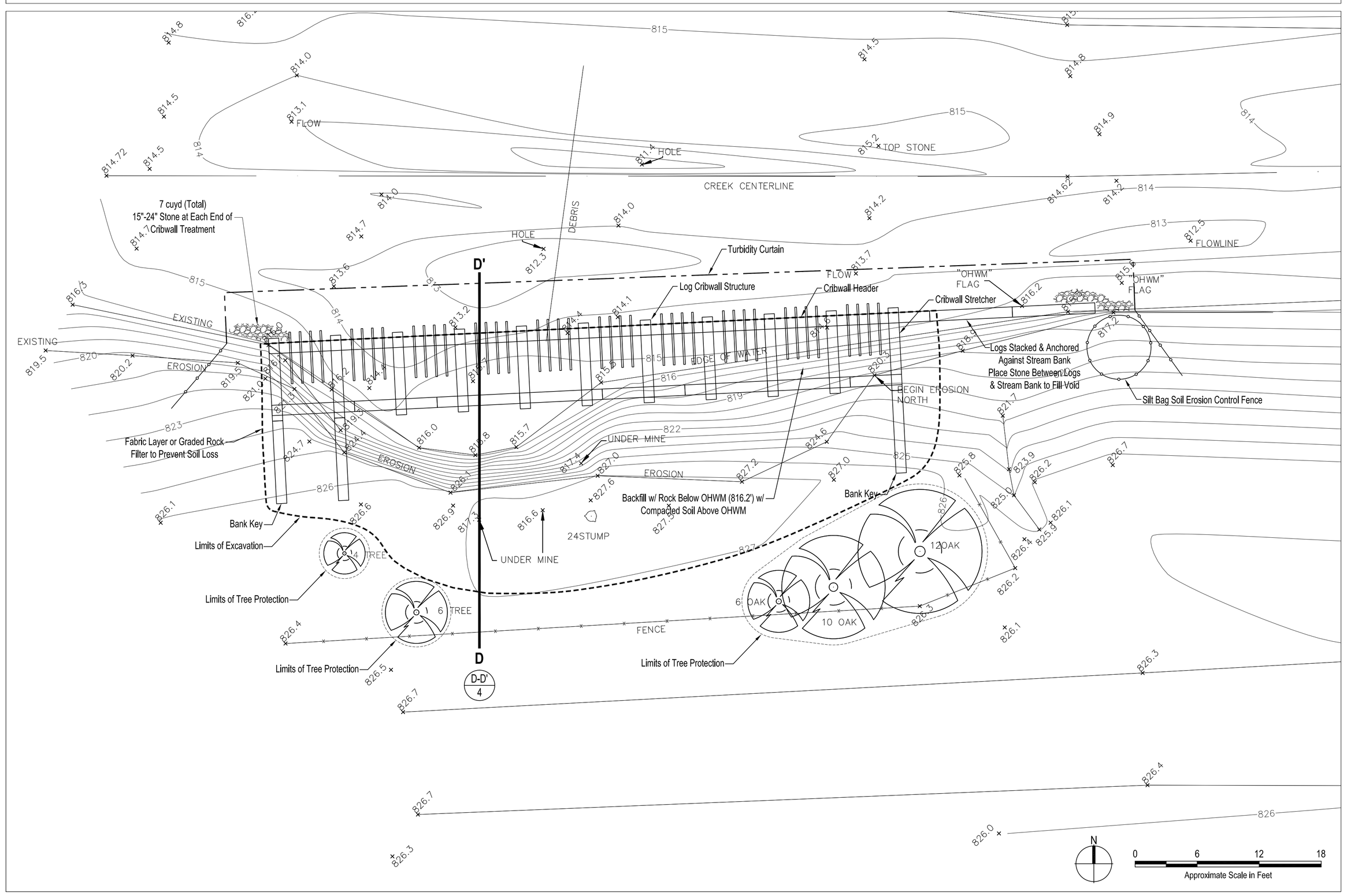

Planting and Seeding Specifications

General Notes

1. Plants shall comply with the recommendations and requirements of ANSI Z60.1, "American Standard Nursery Stock". Plants and live stakes shall be healthy, vigorous stock, grown in a recognized nursery in accordance with good horticultural practice and free of disease, insects, eggs, larvae, and defects such as knots, sunscald, injuries, abrasions, or disfigurement.
2. Planting shall be done by a single Contractor specializing and experienced in landscape work.
3. Tree, shrub, and live stake delivery shall be the same day as planting. No plants shall be stored at the site without permission of the Wetland Consultant or Site Manager. Plants shall be carefully loaded and unloaded so as not to damage branching or root mass. Dropping of material will not be allowed. Plants in full leaf shall be thoroughly wetted down and completely covered with a wet tarp during transportation. All plant roots must be kept in a moist condition and basal ends of dormant live stakes should be soaked in water prior to planting.
4. Plant material shall be the size and true native genus and species shown and scheduled on the drawings. No hybrids or cultivars will be accepted.
5. All plants shall be labeled with securely attached waterproof tag bearing legible designation of botanical and common name. See submittals for requirements of native seed.
6. Mulch, if applicable, shall be shredded, hardwood-bark mulch free from deleterious materials, sticks, twigs, etc. and suitable for top dressing of trees, shrubs, and planting beds.
7. Warranty Period shall extend through the end of the first full growing season. A full growing season is defined as the beginning of May through the end of October of the same year. If installation occurs after June 15, the warranty period shall be extended through the end of October of the next year so as to achieve a full growing season.

Planting

1. Contractor shall notify Wetland Consultant, a minimum of three business days, prior to planting to assist in the layout of the woody plant material and provide a copy of plant material order and receipt.
2. Complete all woody plantings between March 1 - June 15 or October 1 - November 30 or when plants are dormant and soil is not frozen.
3. All trees and shrubs to be planted as shown on plans and details.
4. Warranty shall include a 95% survival rate for each species. Replace all plants in accordance with specifications.
5. Plant maintenance shall begin immediately after each plant is installed and shall continue as required until the end of the warranty period. Maintenance will include watering and cultivation.

Live Stakes

1. Install in late fall to spring when stakes are dormant.
2. Care shall be taken not to damage the live cuttings/live stakes during installation. Those damaged shall be left in place and supplemented with an intact live cutting/live stake. Cut the stem below the damage for any damaged stake.
3. The lengths of live cuttings/live stakes depends upon the application. The length shall extend through the surface and any stone fill. At least half the length shall be inserted into the soil, below the stone fill.
4. A pilot hole is required to ensure that the live cutting/live stake is not damaged when driven through the stone filling. Access shall be made through the use of a dibble bar or similar tool to work an opening through the rock layer.
5. Live cuttings/live stakes shall be cut to a point on the basal end for insertion in the ground.
6. Plant with buds up and chiseled end down, with 80% of the stake underground.
7. Minimum 2" to 4" and two live buds of the live cutting/live stake shall be exposed above the soil surface or stone filling.
8. Live stakes shall range from 1" to 4" in diameter and be from 5' to 6' in length.
9. Species, size, spacing, location of live stakes specified in table at right.
10. Use a dead blow hammer to drive stakes into the ground. The hammer head shall be filled with shot or sand. A dibble, iron bar, or similar tool shall be used to make a pilot hole to prevent damaging the materials during installation.
11. Live cuttings shall be inserted by hand into pilot holes.
12. When possible, tamp soil around live cuttings/live stakes
13. Protect plants at all times from sun, drying winds, and frost. Plants that cannot be planted immediately on delivery shall be kept well protected from winds and frost. Bundles of harvested live material should be kept with cut ends submerged in water to keep cut ends moist at all times. Care shall be taken to keep bundles moist during transportation from the harvest site to the planting site. Live cuttings that appear to be dried out or damaged during transportation will not be accepted.

Seeding

1. Stake limits of seeding and provide seed mix submittals to Wetland Consultant for approval.
2. Approval of Wetland Consultant must be obtained for seed bed preparation and staking prior seeding.
3. Install seed immediately following tree and shrub planting.
4. Install seed between the dates of May 1 through June 15 or October 1 through November 30 or as conditions permit. If seeding occurs between June 15 through October 1, the Contractor is responsible for adequately watering the mitigation sites on a consistent basis for seed germination and establishment. Contractor shall notify the Wetland Consultant for the timing of seed installation.
5. Uniformly broadcast specified seed over the specified areas at the specified rates. Provide a carrier (silica sand or other approved material) to ensure uniform distribution of seed.
6. Immediately following seeding, install erosion control blankets as shown and scheduled on the drawings and per manufacturers specifications.
7. Warranty shall be:
   - Upland seed mix 70% cover at the end of the first growing season.
   - A minimum of 50% survival of all live stakes installed with a minimum of 70% coverage from the surviving stakes at the end of the first season.

Submittals

Contractor shall provide to the Wetland Consultant the following submittals:

- Prairie Seed Mix
- Woody Plant Material order and receipt

wildflowers@voyager.net

Site #1: Stairway

Live Stakes		Number	Length (ft)
Cephalanthus occidentalis	Buttonbush	10	4
Cornus stolonifera	Red-osier dogwood	10	4
Salix interior (exigua)	Sandbar willow	10	4
		30	

Site #3: Silver Bell Road

Live Stakes		Number	Length (ft)
Cephalanthus occidentalis	Buttonbush	65	6
Cornus amomum	Silky dogwood	65	6
Cornus stolonifera	Red-osier dogwood	65	6
Salix interior (exigua)	Sandbar willow	65	6
		260	

ASTI Environmental

Charter Township of Oakland
Oakland County, MI

Paint Creek Shoreline Restoration
Planting Plan - Sites 1 & 3

4

DATE: 11/24/14
SHEET: 4 of 5
GIS/CADD: JMD
CLIENT: Oakland Township Parks & Recreation
PM: PR
CHECKED: PR
PROJECT: 8916

ASTI File 8916

Revisions:

Erosion Control Blanket notes (in addition to the one on the standard detail):

1. Install North American Green natural jute S75BN or equivalent on slopes 4:1 and steeper.
2. Remove ruts, roots, soil clods and other debris, rake soil smooth, and spread seed prior to blanket installation.
3. Position seam overlaps to experience minimum disturbance by the prevailing wind and anticipated high water flow directions.
4. Follow manufacturer installation recommendations as shown.

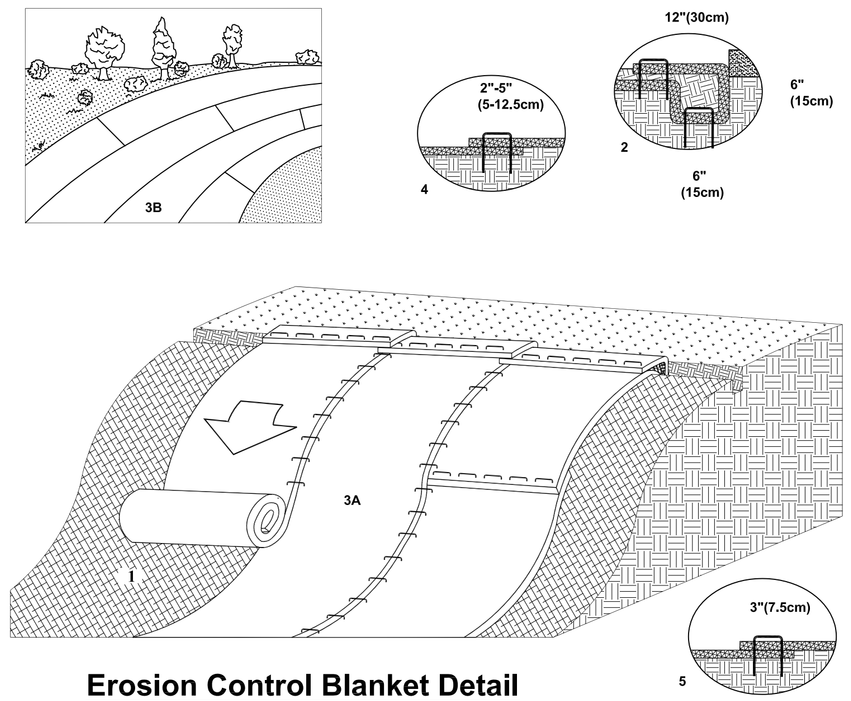

Erosion Control Blanket Detail

Not to Scale

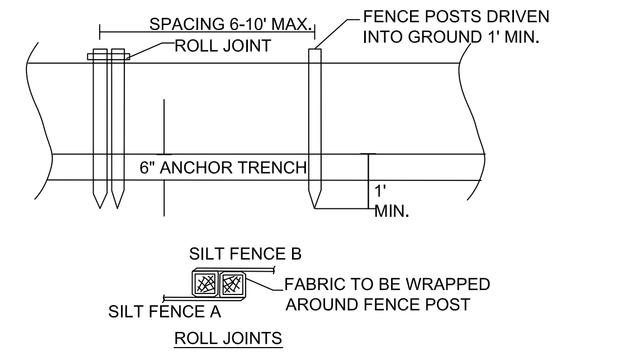

Silt Fence Detail

Not to Scale

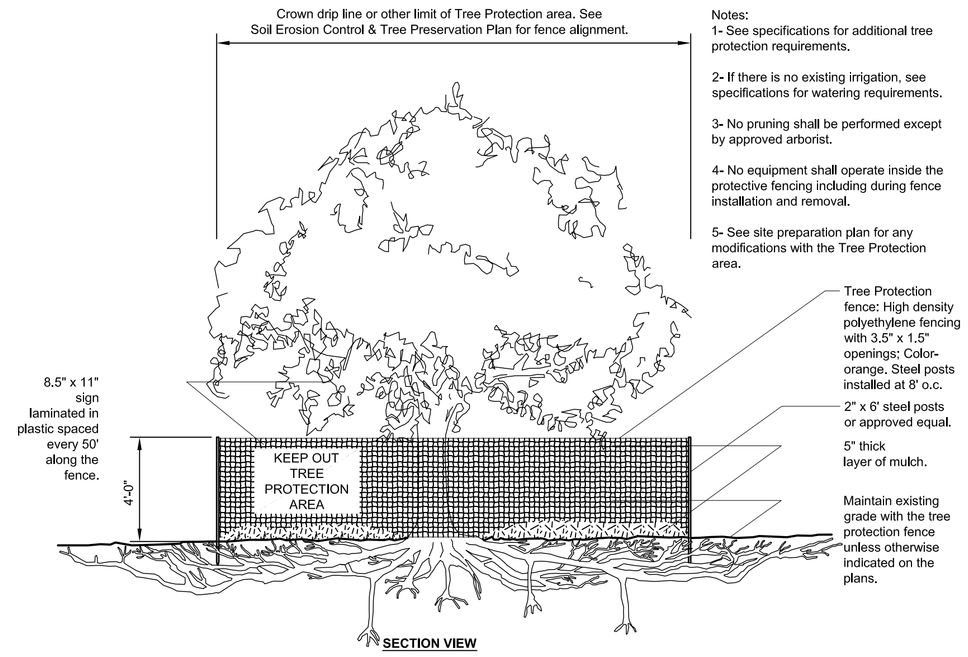

Notes:
1- See specifications for additional tree protection requirements.

2- If there is no existing irrigation, see specifications for watering requirements.

3- No pruning shall be performed except by approved arborist.

4- No equipment shall operate inside the protective fencing including during fence installation and removal.

5- See site preparation plan for any modifications with the Tree Protection area.

Tree Protection Detail

Not to Scale

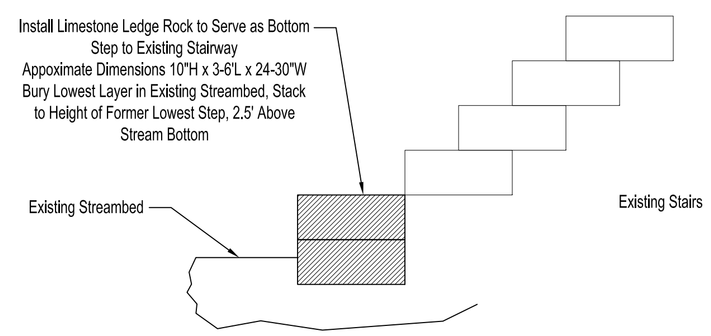

Stairway Detail B-B'

Not to Scale

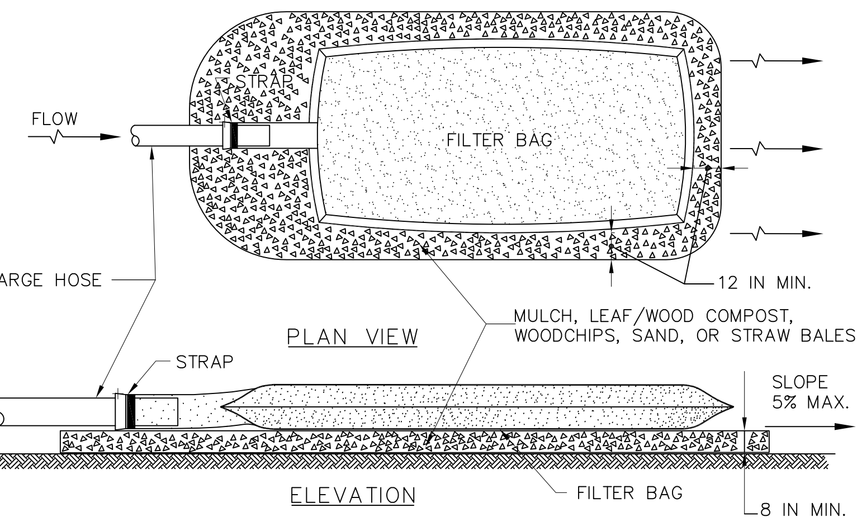

CONSTRUCTION SPECIFICATIONS

1. TIGHTLY SEAL SLEEVE AROUND THE PUMP DISCHARGE HOSE WITH A STRAP OR SIMILAR DEVICE.
2. PLACE FILTER BAG ON SUITABLE BASE (E.G., MULCH, LEAF/WOOD COMPOST, WOODCHIPS, SAND, OR STRAW BALES) LOCATED ON A LEVEL OR 5% MAXIMUM SLOPING SURFACE. DISCHARGE TO A STABILIZED AREA. EXTEND BASE A MINIMUM OF 12 INCHES FROM EDGES OF BAG.
3. CONTROL PUMPING RATE TO PREVENT EXCESSIVE PRESSURE WITHIN THE FILTER BAG IN ACCORDANCE WITH THE MANUFACTURER RECOMMENDATIONS. AS THE BAG FILLS WITH SEDIMENT, REDUCE PUMPING RATE.
4. REMOVE AND PROPERLY DISPOSE OF FILTER BAG UPON COMPLETION OF PUMPING OPERATIONS OR AFTER BAG HAS REACHED CAPACITY, WHICHEVER OCCURS FIRST. SPREAD THE DEWATERED SEDIMENT FROM THE BAG IN AN APPROVED UPLAND AREA AND STABILIZE WITH SEED AND MULCH BY THE END OF THE WORK DAY. RESTORE THE SURFACE AREA BENEATH THE BAG TO ORIGINAL CONDITION UPON REMOVAL OF THE DEVICE.
5. USE NONWOVEN GEOTEXTILE WITH DOUBLE STITCHED SEAMS USING HIGH STRENGTH THREAD. SIZE SLEEVE TO ACCOMMODATE A MAXIMUM 4 INCH DIAMETER PUMP DISCHARGE HOSE. THE BAG MUST BE MANUFACTURED FROM A NONWOVEN GEOTEXTILE THAT MEETS OR EXCEEDS MINIMUM AVERAGE ROLL VALUES (MARV) FOR THE FOLLOWING:

GRAB TENSILE	250 LB	ASTM D-4632
PUNCTURE	150 LB	ASTM D-4833
FLOW RATE	70 GAL/MIN/FT^2	ASTM D-4491
PERMITTIVITY (SEC^{-1})	1.2 SEC^{-1}	ASTM D-4491
UV RESISTANCE	70% STRENGTH @ 500 HOURS	ASTM D-4355
APPARENT OPENING SIZE (AOS)	0.15-0.18 MM	ASTM D-4751
SEAM STRENGTH	90%	ASTM D-4632

6. REPLACE FILTER BAG IF BAG CLOGS OR HAS RIPS, TEARS, OR PUNCTURES. DURING OPERATION KEEP CONNECTION BETWEEN PUMP HOSE AND FILTER BAG WATER TIGHT. REPLACE BEDDING IF IT BECOMES DISPLACED.

Sediment Filter Bag Detail

Not to Scale

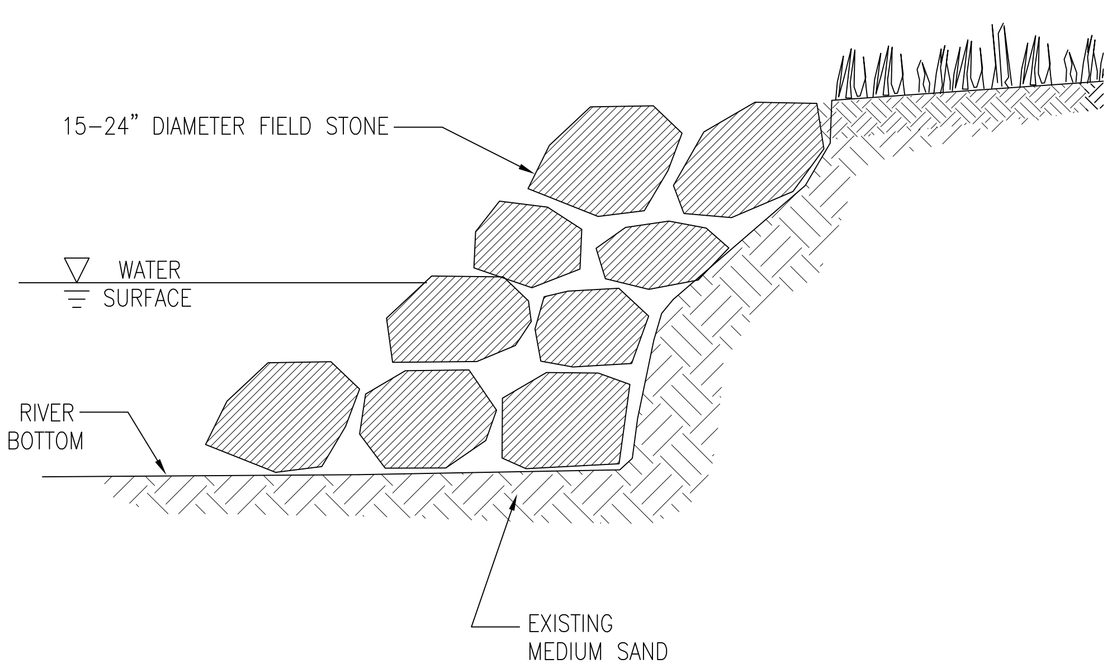

Typical Slope Riprap Detail C-C'

Not to Scale

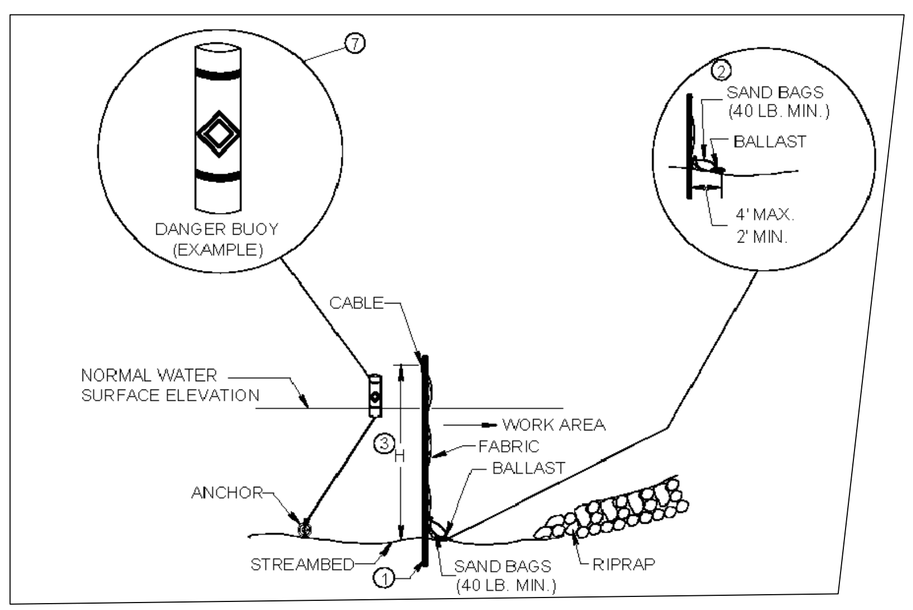

Turbidity Curtain Detail

Not to Scale

ASTI Environmental

Charter Township of Oakland
Oakland County, MI

Paint Creek Shoreline Restoration
Details

5

ASTI File 8916

Revisions:

DATE: 11/24/14
SHEET: 5 of 5
GIS/CADD: JMD
CLIENT: Oakland Township Parks & Recreation
PM: PR
CHECKED: PR
PROJECT: 8916